A Low Power CMOS Voltage Mode SRAM Cell for High Speed VLSI Design

1) **A Low Power CMOS Voltage Mode SRAM Cell for High Speed VLSI Design (8T SRAM)**

Introduction

Low power design is critical in modern VLSI systems to improve reliability and reduce energy consumption. In most CMOS circuits, **dynamic power**—proportional to switching activity, voltage swing, and operating frequency—dominates total power dissipation. While lowering the supply voltage reduces power, it can degrade circuit performance. An alternative approach is to **limit the voltage swing** during data transitions.

Traditional **6T SRAM** cells operate with full voltage swings, which leads to high dynamic power, especially at high operating frequencies. This project implements a modified SRAM architecture that significantly reduces dynamic power by limiting the voltage swing at internal nodes during write operations.

This project presents a novel design of a **low-power static random access memory (SRAM)** cell aimed at high-speed CMOS VLSI circuits. The proposed SRAM uses a **voltage mode technique** to limit voltage swing during write operations by employing **two additional voltage sources (VS1 and VS2)** connected to the bit and bit-bar lines. This configuration minimizes dynamic power consumption without compromising operational speed. Using **90 nm CMOS technology** with a **1 V supply**, simulations carried out in **Microwind 3.1** show that dynamic power dissipation remains almost constant with increasing frequency — a significant improvement over the conventional 6T SRAM cell.

Conventional 6T SRAM Cell

The **6-transistor SRAM** cell consists of two cross-coupled inverters and two access transistors.

- **Write Operation:** Performed through bit lines (BL/$\overline{BL}$) controlled by the word line (WL).
- **Drawback:** Operates on full supply voltage (VDD = 1 V), so **dynamic power increases linearly with frequency**.
- **Dynamic Power Formula:**

$$P_{dynamic} = \alpha C_{load} V_{DD} V_{swing} f$$

where f is the clock frequency, V_{swing} is the node voltage swing, and C_{load} is the load capacitance.

Thus, for high-speed CMOS design, the 6T SRAM suffers from large switching power consumption.

Proposed Voltage-Mode SRAM Cell

To overcome the power inefficiency of the conventional design, the proposed model introduces:

- Two extra NMOS transistors (**VT1** and **VT2**)
- Two voltage sources (**VS1** and **VS2**)

These are connected to the bit and bit-bar lines to **reduce voltage swing** during write operations.

3.1 Write ‘0’ Operation

- BL = Low, $B\overline{L}$ = High
- VT2 turns ON, VT1 turns OFF
- VS2 limits the voltage swing at the bit-bar line output

3.2 Write ‘1’ Operation

- BL = High, $B\overline{L}$ = Low
- VT1 turns ON, VT2 turns OFF
- VS1 limits the voltage swing at the bit line output

As a result, the **voltage swing is reduced**, keeping **dynamic power almost constant** even as the operating frequency increases.

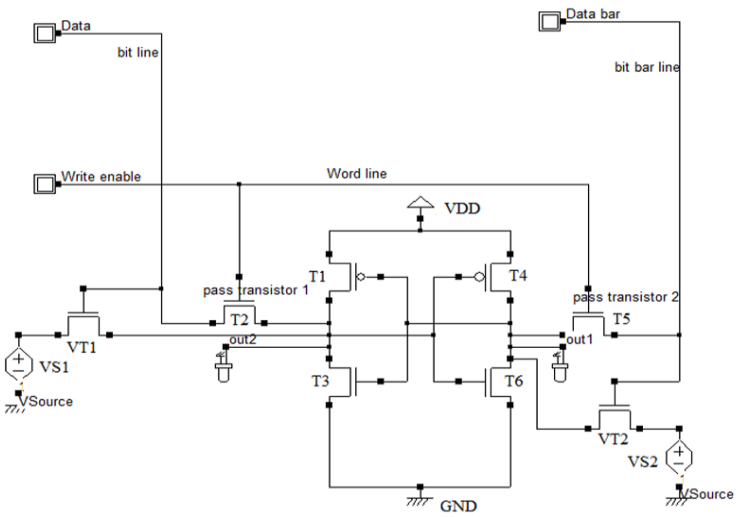

Figure 2. Proposed SRAM Cell.

Parameter	Value
Technology	90 nm CMOS
Supply Voltage	1 V
VS1 & VS2	0.475 V
Simulation Tool	Microwind 3.1
Model Used	BSIM4
Frequency Range	500 MHz – 2 GHz

Transistor	Width (nm)	Length (nm)
T1	75	90
T2	115	90
T3	175	90
T4	75	90
T5	115	90
T6	175	90
VT1	300	90
VT2	300	90

Proposed 8T circuit in static mode

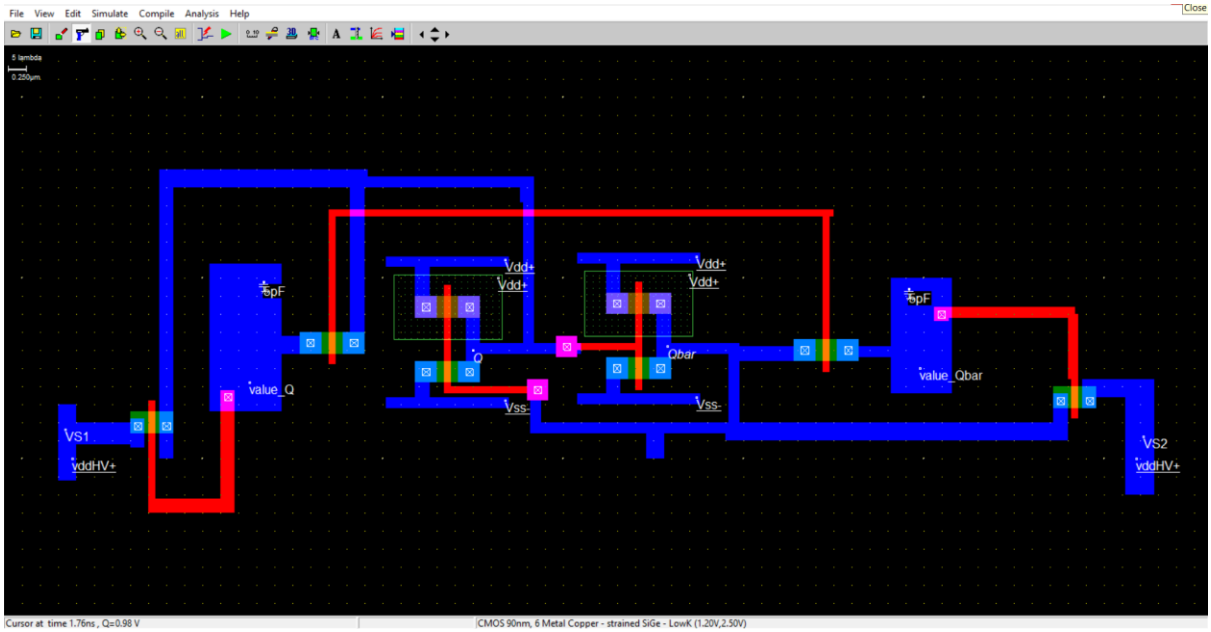

Static Power observation;

Proposed 8T SRAM circuit in write mode;

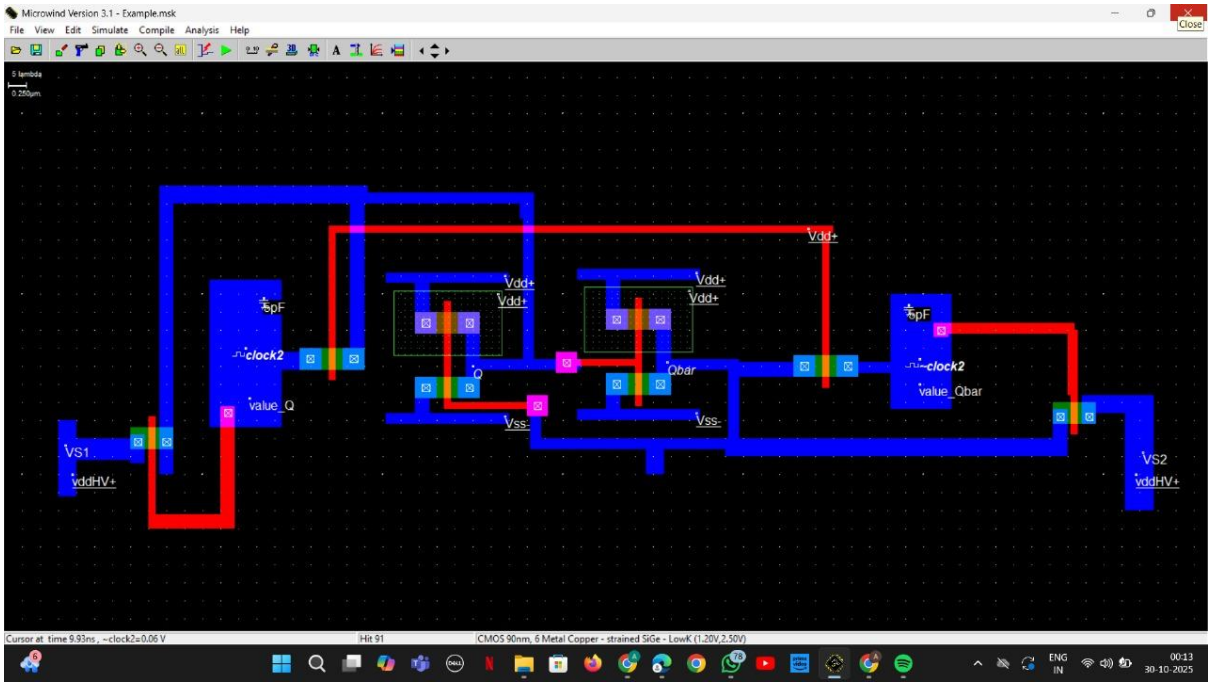

Power analysis at different frequencies;

1) 500Mhz; Average Power dissipated=82.386uW

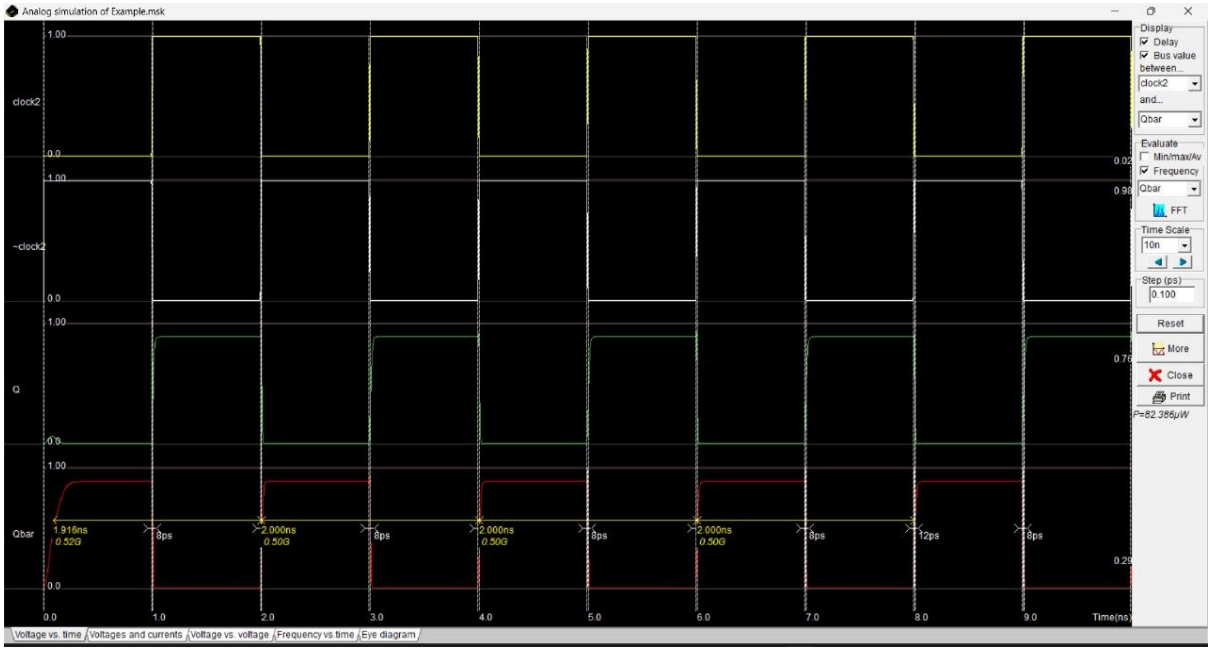

2) 1Ghz; Average Power dissipated=83.465uW

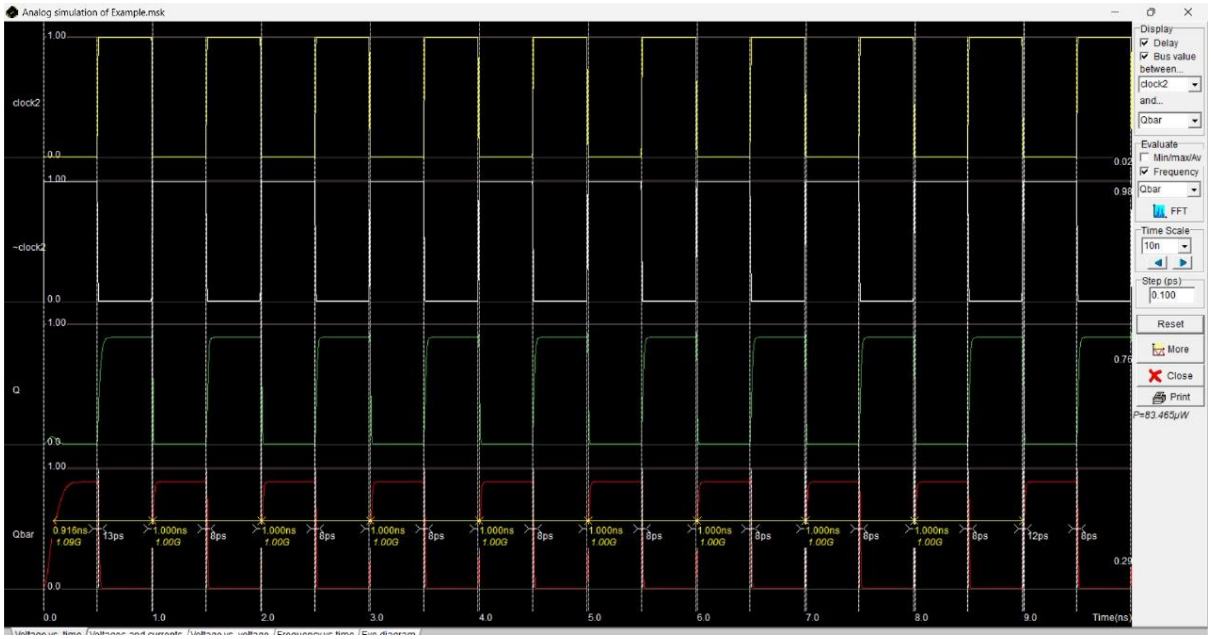

3) 2Ghz; Average Power dissipated=85.622uW

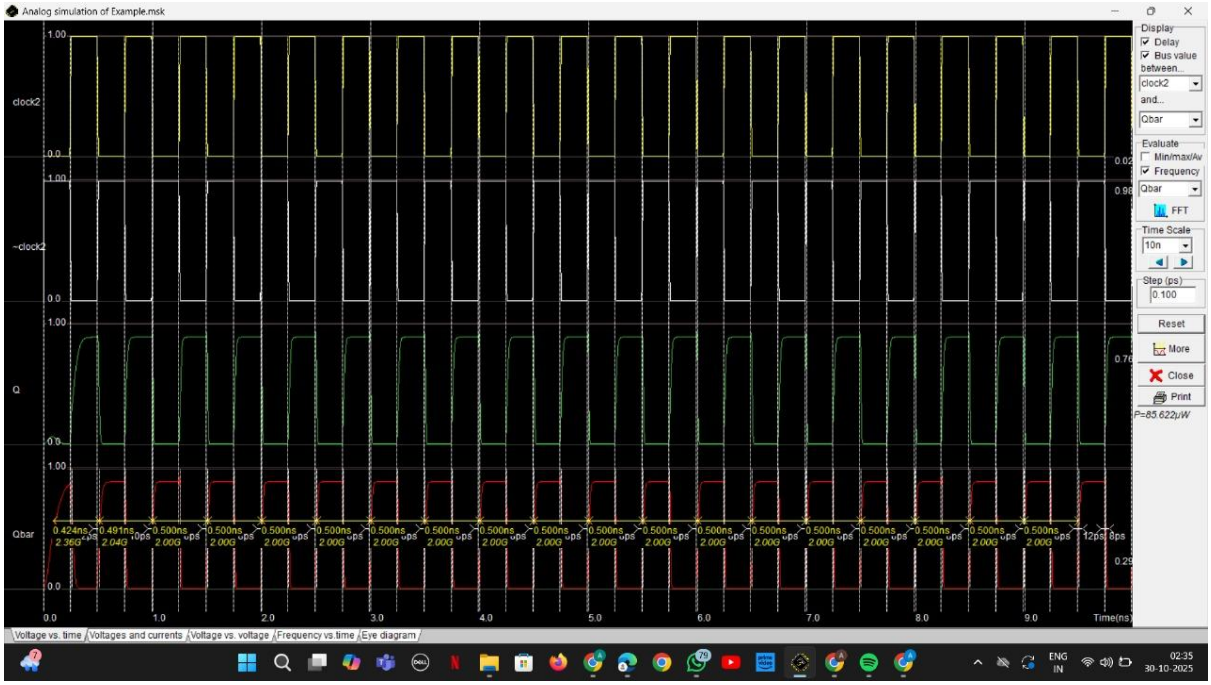

Static power obtained was 0.502uW

Frequency	Avg power-Static Power	Dynamic Power
500Mhz	(82.386-0.502)uW	81.884uW
1Ghz	(83.465-0.502)uW	82.963uW
2Ghz	(85.622-0.502)uW	85.12uW

Hence, we see that on changing frequency, the dynamic power doesn't vary much in our proposed model.

Whereas in 6T sram on changing frequency the dynamic power almost gets doubled

For 500Mhz-2.039uW

For 1Ghz-4.036uW

For 2Ghz-8.031uW

Netlist

```
CIRCUIT C:\Users\ANUSHKA MISHRA\Desktop\final8t.MSK
*
* IC Technology: CMOS 90nm, 6 Metal Copper - strained SiGe - LowK
*
VDD 1 0 DC 1.00
V8_vddHV 8 0 DC 0.47V
V~clock2 9 0 DC 0 PULSE(1.00 0.00 0.24N 0.01N 0.01N 0.24N 0.50N)
Vclock2 12 0 DC 0 PULSE(0.00 1.00 0.24N 0.01N 0.01N 0.24N 0.50N)
V13_vddHV 13 0 DC 0.47V
*
```

```
* List of nodes
* "Qbar" corresponds to n°4
* "Q" corresponds to n°6
* "~clock2" corresponds to n°9
* "clock2" corresponds to n°12
*
* MOS devices
MN1 0 4 6 0 N1  W= 0.30U L= 0.10U
MN2 0 6 4 0 N1  W= 0.30U L= 0.10U
MN3 4 1 9 0 N1  W= 0.30U L= 0.10U
MN4 4 9 8 0 N1  W= 0.30U L= 0.10U
MN5 12 1 6 0 N1  W= 0.30U L= 0.10U
MN6 13 12 6 0 N1  W= 0.30U L= 0.10U
MP1 1 6 4 1 P1  W= 0.30U L= 0.10U
MP2 1 4 6 1 P1  W= 0.30U L= 0.10U
*
C2 1 0  0.338fF
C3 1 0  0.338fF
C4 4 0  1.867fF
C5 1 0  0.374fF
C6 6 0  2.131fF
C7 1 0  0.374fF
C8 8 0  0.390fF
C9 9 0  0.500fF
C12 12 0  0.576fF
C13 13 0  0.370fF
C14 1 0  0.090fF
```

```
*
* Extra RLC
*
Cadd1 12 0 5pF
Cadd2 9 0 5pF
*
*
* n-MOS BSIM4 :
* low leakage
.MODEL N1 NMOS LEVEL=14 VTHO=0.28 U0=0.060 TOXE= 1.2E-9
LINT=0.015U
+K1 =0.450 K2=0.100 DVT0=2.300
+DVT1=0.570 LPE0=23.000e-9 ETA0=0.080
+NFACTOR=  0.9 U0=0.060 UA=3.400e-15
+WINT=0.005U LPE0=23.000e-9
+KT1=-0.060 UTE=-1.800 VOFF=0.010
+XJ=0.150U NDEP=170.000e15 PCLM=1.100
+CGSO=100.0p CGDO=100.0p
+CGBO= 60.0p
*
* p-MOS BSIM4:
* low leakage
.MODEL P1 PMOS LEVEL=14 VTHO=-0.32 U0=0.027 TOXE= 1.2E-9
LINT=0.015U
+K1 =0.450 K2=0.100 DVT0=2.300
+DVT1=0.570 LPE0=23.000e-9 ETA0=0.080
+NFACTOR=  1.9 U0=0.027 UA=2.200e-15
+WINT=0.005U LPE0=23.000e-9
```

```
+KT1=-0.060 UTE=-1.800 VOFF=0.010
+XJ=0.150U NDEP=170.000e15 PCLM=0.700
+CGSO=100.0p CGDO=100.0p
+CGBO= 60.0p
*
* Transient analysis
*
* (Winspice)
.options temp=27.0
.control
tran 0.1N 10.00N
print  V(4) V(6) V(12) V(9) > out.txt
plot  V(4) V(6) V(12) V(9)
.endc
.END
```

Conclusion

This project demonstrates that a **Voltage-Mode SRAM cell** can significantly reduce dynamic power dissipation compared to conventional 6T SRAM, especially in high-frequency VLSI systems. Despite a minor area overhead, the constant power behavior makes this design ideal for **low-power, high-speed CMOS applications**.